Datasheet **57122**

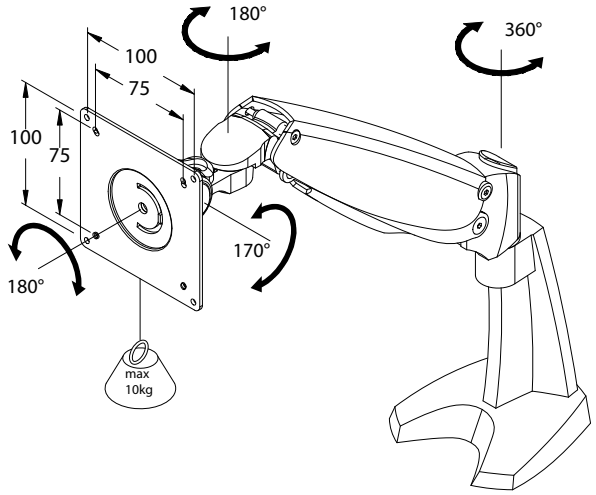

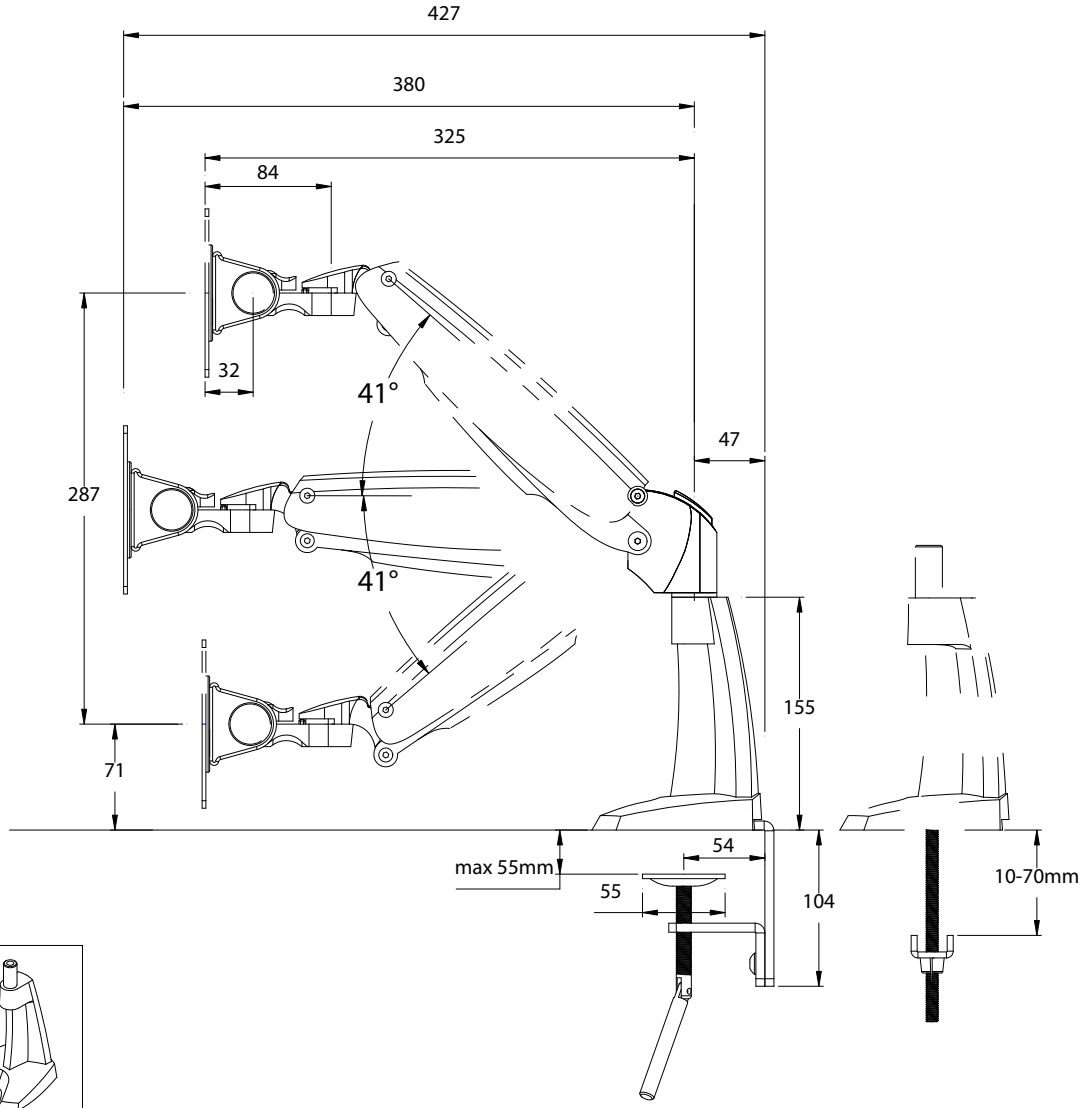

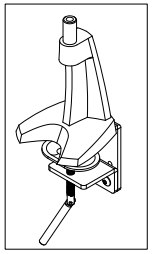

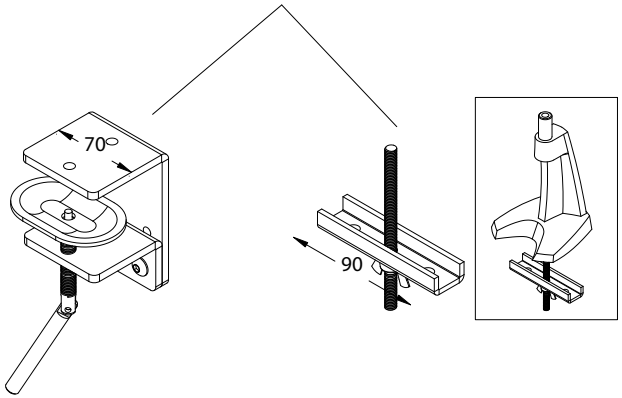

Created © Dataflex International BV - Krimpen a/d IJssel, The Netherlands

Dimensions in mm - Dimensions en mm - Abmessungen in mm - Afmetingen in mm