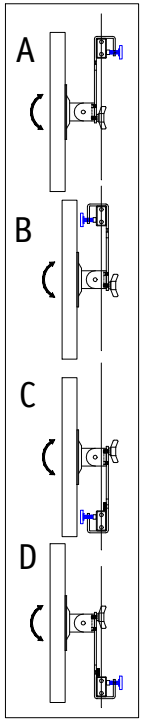

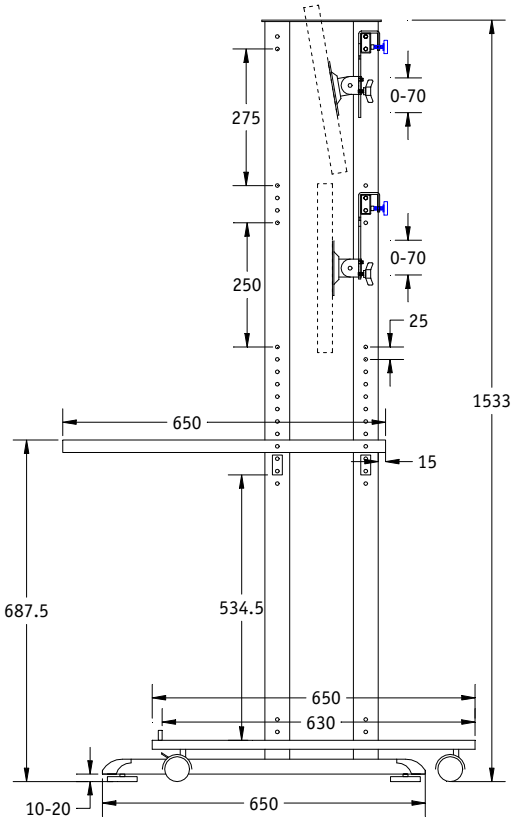

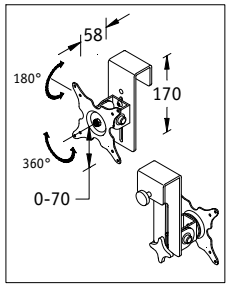

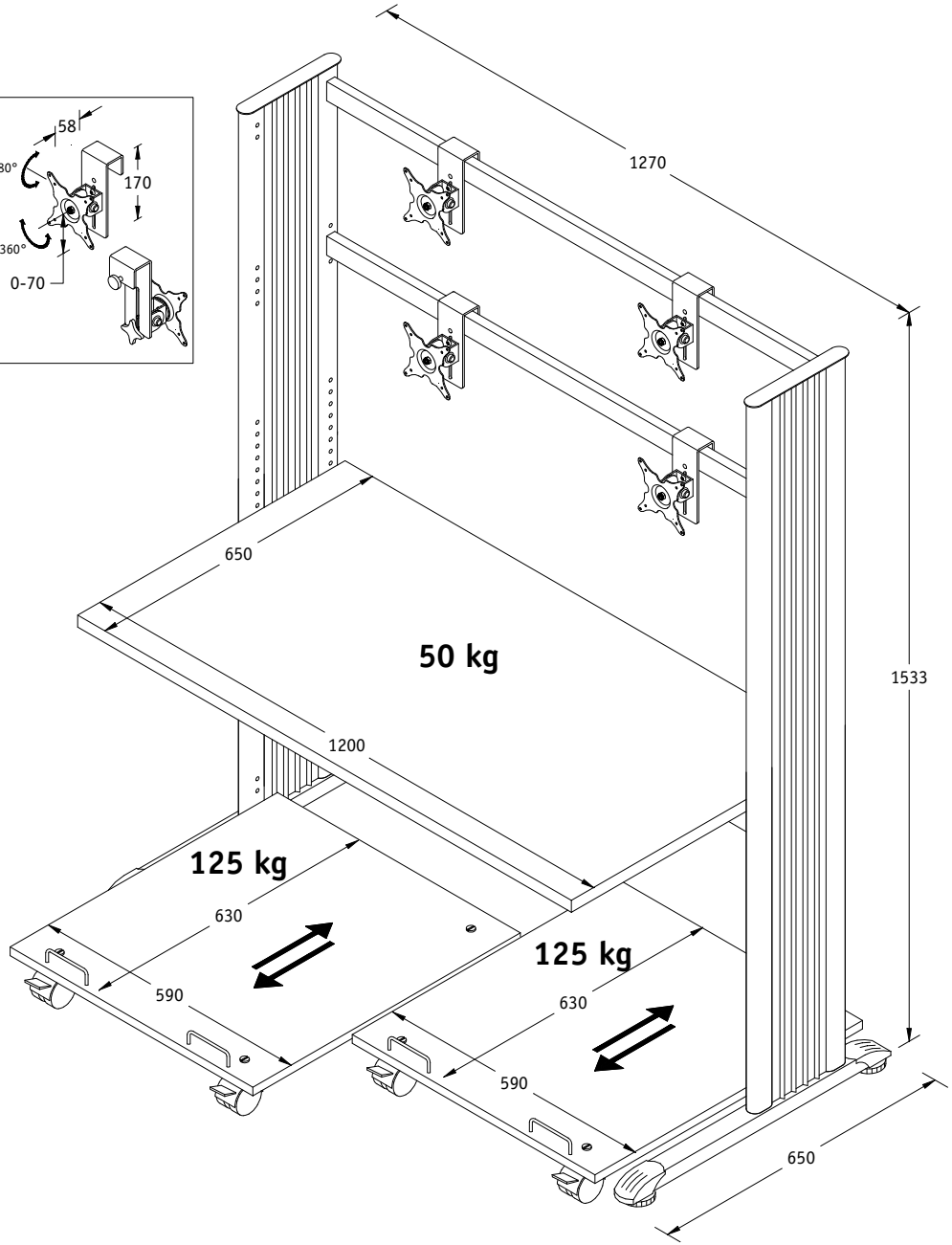

All dimensions in mm - Dimensions en mm - Abmessungen in mm - Alle afmetingen in mm

Dataflex®

OFFICE FURNITURE AND ERGONOMICS

DATA-INFO # 91.110/2/3

Dataflex® is a registered trademark of DATAFLEX INTERNATIONAL BV P.O. Box 713 NL-2920 CA Krimpen a/d Ijssel